I-7052(D) **M-7052(D)**

8-channel Isolated Digital Input Module

I-7053(D)_FG **M-7053(D)**

16-channel Non-isolated Digital Input Module

Features

- I-7052(D)/M-7052(D)
  - Differential Digital Inputs
  - Sink- or Source-type Input
  - 4 kV ESD Protection
  - 5000 V_{rms} Isolation Voltage
- I-7053(D)_FG/M-7053(D)_FG
  - 16 Source-type Digital Inputs
  - Long Effective Distance
  - Dry Contact Input
  - Non-isolated for all Channels
- All Channels Can Be Used As 16-bit Counters
- Dual Watchdog
- Wide Operating Temperature Range: -25 to +75°C

Introduction

System Specifications

Model	I-7052 / I-7052D	M-7052 / M-7052D	I-7053_FG / I-7053D_FG	M-7053 / M-7053D
Communication				
Interface	RS-485			
Bias Resistor	No (Usually supplied by the RS-485 Master. Alternatively, add a tM-SG4 or SG-785.)			
Format	(N, 8, 1) (N, 8, 2) (E, 8, 1) (O, 8, 1)			
Baud Rate	1200 to 115200 bps			
Protocol	DCON	Modbus RTU, DCON	DCON	Modbus RTU, DCON
Dual Watchdog	Yes, Module (1.6 Seconds), Communication (Programmable)			
LED Indicators/Display				
System LED Indicator	Yes, 1 as Power/Communication Indicator			
I/O LED Indicators	-	-	-	-
	Yes, 8 LEDs as Digital Input Indicators		Yes, 16 LEDs as Digital Input Indicators	
7-segment LED Display	-			
Isolation				
Intra-module Isolation, Field-to-Logic	5000 V_{rms}		-	
EMS Protection				
ESD (IEC 61000-4-2)	4 kV Contact for each Terminal		-	
	8 kV Air for Random Point		-	
EFT (IEC 61000-4-4)	±4 kV for Power Line		-	
Surge (IEC 61000-4-5)	-			
Power				
Reverse Polarity Protection	Yes			
Input Range	+10 ~ +30 V_{DC}			
Consumption	0.2 W	0.2 W	0.7 W	0.7 W
	0.6 W	0.6 W	0.9 W	0.9 W
Mechanical				
Dimensions (L x W x H)	123 mm x 72 mm x 35 mm			
Installation	DIN-Rail or Wall Mounting			
Environment				
Operating Temperature	-25 to +75°C			
Storage Temperature	-40 to +85°C			
Humidity	10 to 95% RH, Non-condensing			

hardware specifications as the I-7052, but provides additional support for the Modbus RTU protocol as well as the DCON protocol.

The I-7053_FG features a long effective distance measurement for dry contact digital input of up to 500 meters. The I-7053_FG supports source-type input. All 16 channels are also able to be used as 16-bit counters, each of which are non-isolated. The I-7053D_FG has 16 LED indicators for channel status monitoring. The M-7053 has the same hardware specifications as the I-7053_FG, but provides additional support for the Modbus RTU protocol as well as the DCON protocol.

Applications

Building Automation, Factory Automation, Machine Automation, Remote Maintenance, Remote Diagnosis, Testing Equipment.

I/O Specifications

Model		I-7052 / I-7052D	M-7052 / M-7052D	I-7053_FG / I-7053D_FG	M-7053 / M-7053D
Digital Input/Counter					
Channels		8		16	
Type	Dry Contact	-		Source	
	Wet Contact	Sink/Source		-	
Wet Contact	ON Voltage Level	+4 ~ 30 V_{DC}		-	
	OFF Voltage Level	+1 V_{DC} Max.		-	
Dry Contact	ON Voltage Level	-		Open	
	OFF Voltage Level	-		Close to GND	
	Effective Distance for Dry Contact	-		500 m Max.	
Counters	Max. Count	65535 (16-bit)			
	Max. Input Frequency	100 Hz			
	Min. Pulse Width	5 ms			
Input Impedance		3 kΩ		-	
Channel-to-Channel Isolation		Yes, ±2 kV for differential only.		-	
Overvoltage Protection		±35 V_{DC}		-	

Internal I/O Structure

I-7052(D)/M-7052(D)

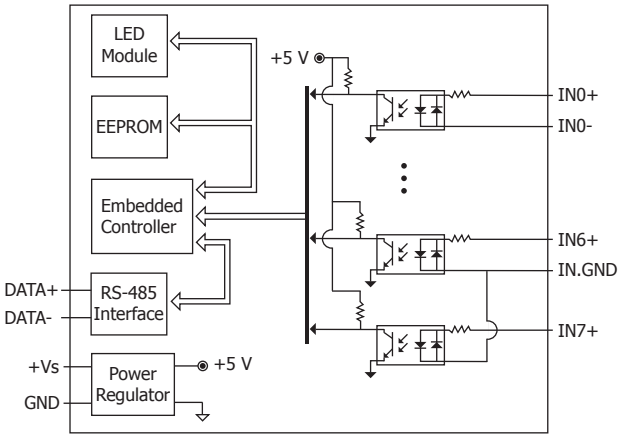

I-7053(D)_FG/M-7053(D)

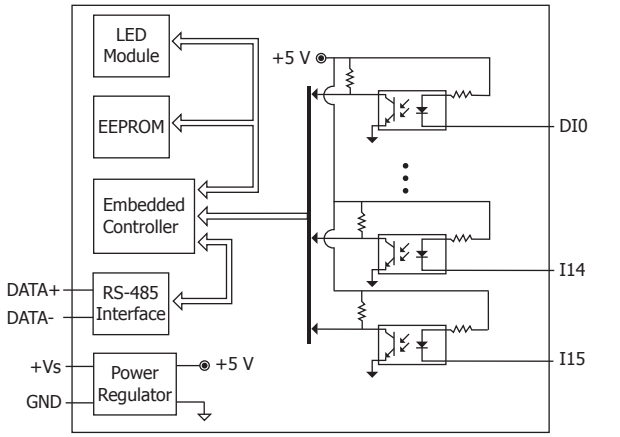

Wire Connections

I-7052(D)/M-7052(D)		
Digital Input/ Counter	**ON State Readback as 1**	**OFF State Readback as 0**
Channel 0 to 5 Wet Contact (Sink)	+4 ~ +30 VDC 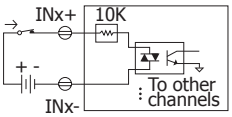	Open or +1 VDC Max. 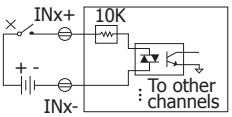
Channel 0 to 5 Wet Contact (Source)	+4 ~ +30 VDC 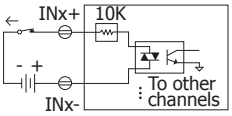	Open or +1 VDC Max. 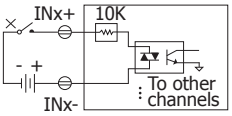
Channel 6 to 7 Wet Contact (Sink)	+4 ~ +30 VDC 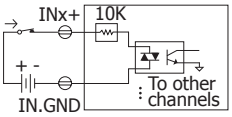	Open or +1 VDC Max. 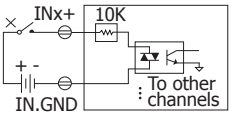

I-7053(D)_FG/M-7053(D)		
Digital Input/ Counter	**ON State Readback as 1**	**OFF State Readback as 0**
Dry Contact	OPEN or <4 VDC 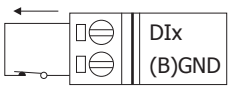	+3.5 ~ +30 VDC 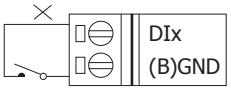

Pin Assignments

I-7052(D)/M-7052(D)

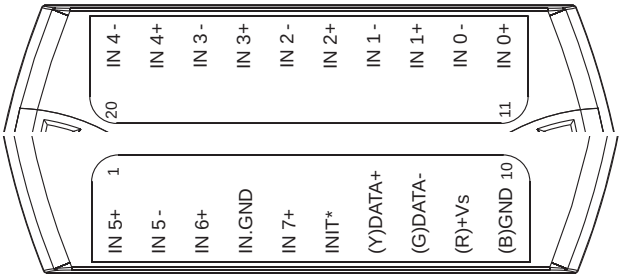

I-7053(D)_FG/M-7053(D)

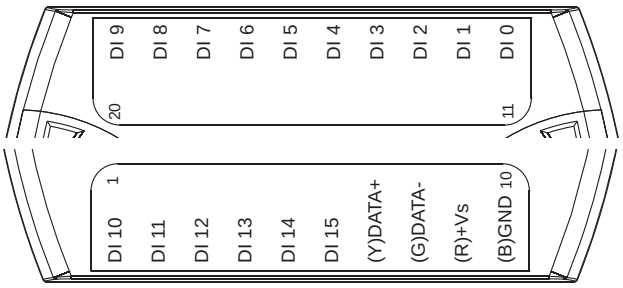

Ordering Information

I-7052 CR	8-channel Isolated Digital Input Module using the DCON Protocols (Blue Cover) (RoHS)	Art. No. 113795
I-7052D CR	I-7052 with LED Display (Blue Cover) (RoHS)	Art. No. 113812
I-7052D-G CR	I-7052 with LED Display (Gray Cover) (RoHS)	
M-7052-G CR	8-channel Isolated Digital Input Module using the DCON and Modbus Protocols (Gray Cover) (RoHS)	Art. No. 116938
M-7052D-G CR	M-7052 with LED Display (Gray Cover) (RoHS)	Art. No. 114985
I-7053_FG CR	16-channel Non-isolated Digital Input Module using the DCON Protocols (Blue Cover) (RoHS)	Art. No. 113325
I-7053_FG-G CR	16-channel Non-isolated Digital Input Module using the DCON Protocols (Gray Cover) (RoHS)	
I-7053D_FG CR	I-7053_FG with LED Display (Blue Cover) (RoHS)	Art. No. 113326
I-7053D_FG-G CR	I-7053_FG with LED Display (Gray Cover) (RoHS)	
M-7053-G CR	16-channel Non-isolated Digital Input Module using the DCON and Modbus Protocols (Gray Cover) (RoHS)	Art. No. 116940
M-7053D-G CR	M-7053 with LED Display (Gray Cover) (RoHS)	Art. No. 114710

Accessories

	tM-7520U CR	RS-232 to RS-485 Converter (RoHS)
	tM-7561 CR	USB to RS-485 Converter (RoHS)
	tM-SG4 CR	RS-485 Bias and Termination Resistor Module (RoHS)
	I-7514U CR	4-channel RS-485 Hub (RoHS)
	SG-770 CR	7-channel Differential or 14-channel Single-ended Surge Protector (RoHS)
	SG-3000 Series	Signal Conditioning Modules for Thermocouple, RTD, DC Voltage, DC Current and Power Input Transformers