Cervoz Industrial Embedded Module

SATA Disk 7pin Vertical Tall

Momentum Series (MLC)

M350 Family

Product Datasheet

Date: 2020.10.15

Revision: 1.0

File: Cervoz_Industrial_Embedded_Module_SATA_Disk_7pin_Vertical_Tall_M350_Datasheet_Rev1.0

Revision History

Date	Revision	Description
2020.10.15	1.0	First Released

Spectra GmbH & Co. KG
vertrieb@spectra.de

Niederlassung Österreich
info@spectra-austria.at

Spectra (Schweiz) AG
info@spectra.ch

Table of Contents

1. Product Overview……4
1.1 Introduction……4
1.2 Feature……4
1.3 Product Appearance & Models……5

2. Product Specifications……6
2.1 General Specifications……6
2.2 Performance……6
2.3 Electronic Specifications……7
2.3.1 Block Diagram……7
2.3.2 Pin Assignment……8
2.4 Environmental Specifications……8
2.5 Mechanical Specifications……9

3. Supported Command……10
3.1 List of Command Sets……10

4. Part No. Decoder……11
4.1 Part No. Decoder……11~12

Spectra GmbH & Co. KG
vertrieb@spectra.de
Niederlassung Österreich
info@spectra-austria.at
Spectra (Schweiz) AG
info@spectra.ch
spectra

1. Product Overview

1.1 Introduction

Cervoz Industrial SATA Disk 7pin Vertical Tall Embedded Module M350 is a Solid State Flash Disk product that is in compliance with the SATA III standards. The SATA Disk 7pin Vertical Tall Embedded Module M350 is in low profile form factor and fits in any SATA sockets internally of a PC or on a motherboard; it can be used for both booting or storage purposes.

M350 uses superior quality preselected multi-level cell (MLC) NAND flash memory from the industry leading manufacturer Kioxia (Toshiba). This product includes both standard temperature range and wide temperature range options with various capacities to choose from.

M350 offers outstanding performance and reliability; the product family is a perfect solution for price sensitive semi-industrial and general industrial applications.

1.2 Feature

- Compliant with SATA III 6.0Gb/s
- MLC NAND flash memory
- Capacity: 32GB ~ 128GB
- Operating as boot disk
- Product includes Standard Temperature range & Wide Temperature range
- Static and dynamic wear leveling
- Bad block management
- S.M.A.R.T. & TRIM command

Spectra GmbH & Co. KG
vertrieb@spectra.de
Niederlassung Österreich
info@spectra-austria.at
Spectra (Schweiz) AG
info@spectra.ch
spectra

1.3 Product Appearance & Models

Cervoz Industrial SATA Disk 7pin Vertical Tall Module M350

M350 Family Standard Temp. (0°C ~ 70°C) Model No.	M350 Family Wide Temp. (-40°C ~ 85°C) Model No.	Capacity
CIE-7TM350TKD032GS	CIE-7TM350TKD032GW	32GB
CIE-7TM350TLD064GS	CIE-7TM350TLD064GW	64GB
CIE-7TM350TMD128GS	CIE-7TM350TMD128GW	128GB

Please Note:

Since certain storage capacity has to be reserved for firmware and controller management purposes; the physical capacity of the SATA flash module will be approximately 92.5% of the indicated capacity. If you need to install an image that has the exact (or close to) the indicated size of the flash module, please choose your flash module with a greater capacity.

Spectra GmbH & Co. KG
vertrieb@spectra.de

Niederlassung Österreich
info@spectra-austria.at

Spectra (Schweiz) AG
info@spectra.ch

spectra

2. Product Specifications

2.1 General Specifications

Form Factor	SATA Disk 7pin Vertical Tall
Interface	SATA III 6.0Gb/s (backward compatible to 3.0Gb/s, 1.5Gb/s)
Connector	SATA (7pin)
NAND Flash Type	MLC
Capacity	32GB/64GB/128GB
Sequential Read	up to 560MB/s
Sequential Write	up to 345MB/s
ECC Scheme	Applies the LDPC (Low Density Parity Check) of ECC algorithm
MTBF	2,000,000 hours
TeraByte Written (TBW)	32GB : 31 64GB : 63 128GB : 125
Low Power Management	DIPM/HIPM mode
Supply Voltage	+5V DC +/-5%
Power Consumption	Active mode: < 1450mW Idle mode: < 350mW
Dimension (LxWxH)	43.67*22.00*1.00mm

2.2 Performance

The performance was measured with below PC configuration:

- Platform: ASUS Z97-A (Intel Z97)
- RAM: Cervoz CIR-S3DUSK1604G(DDR3 4G 1600MHz)
- Operation Systems: Windows 7
- Testing Utility: Crystal Disk Mark v5.1.0
- SATAIII port (6.0 Gb/s) performance

Capacity	32GB	64GB	128GB
Sequential Read (max.)	555MB/s	560MB/s	560MB/s
Sequential Write (max.)	170MB/s	345MB/s	325MB/s
4KB Random Read (QD32)	165MB/s	280MB/s	300MB/s
4KB Random Write (QD32)	165MB/s	305MB/s	310MB/s

Actual performance may vary depending on use conditions and environment

Spectra GmbH & Co. KG
vertrieb@spectra.de
Niederlassung Österreich
info@spectra-austria.at
Spectra (Schweiz) AG
info@spectra.ch
spectra

2.3 Electronic Specifications

2.3.1 Block Diagram

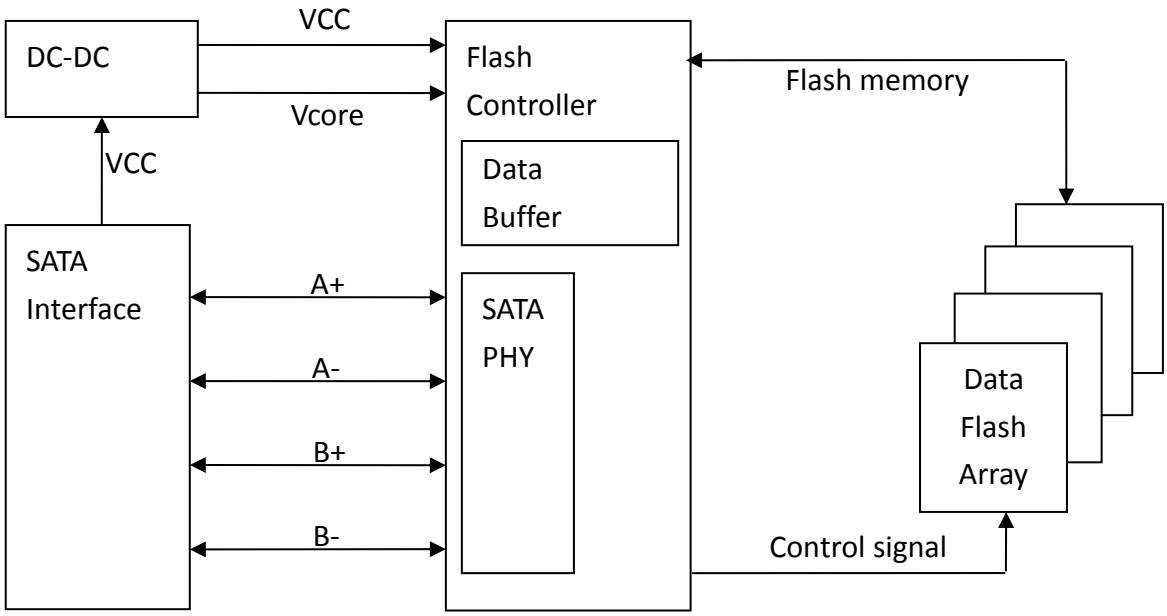

Spectra GmbH & Co. KG
vertrieb@spectra.de

Niederlassung Österreich
info@spectra-austria.at

Spectra (Schweiz) AG
info@spectra.ch

2.2.2 Pin Assignment

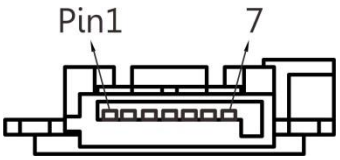

Pin No.	Function	Description
S1	GND	Ground
S2	RX+	Differential signal pair A
S3	RX-	
S4	GND	Ground
S5	TX-	Differential signal pair B
S6	TX+	
S7	GND	Ground

2.4 Environmental Specifications

Type		Value
Temperature	Standard Temperature Operating: Standard Temperature Storage: Wide Temperature Operating: Wide Temperature Storage:	0˚C~70˚C -40˚C~85˚C -40˚C~85˚C -40˚C~85˚C
Humidity	Operating & Storage	10~95%, Non-Condensing
Vibration	Non-Operating	20G, 10Hz~2000Hz
Shock	Non-Operating	1500G, 0.5ms

Spectra GmbH & Co. KG
vertrieb@spectra.de
Niederlassung Österreich
info@spectra-austria.at
Spectra (Schweiz) AG
info@spectra.ch
spectra

2.5 Mechanical Specifications

Type	Value
Form Factor	SATA Disk
Length	43.67mm +/-0.15mm
Width	22.00mm +/-0.15mm
Thickness	6.30mm +/-0.30mm

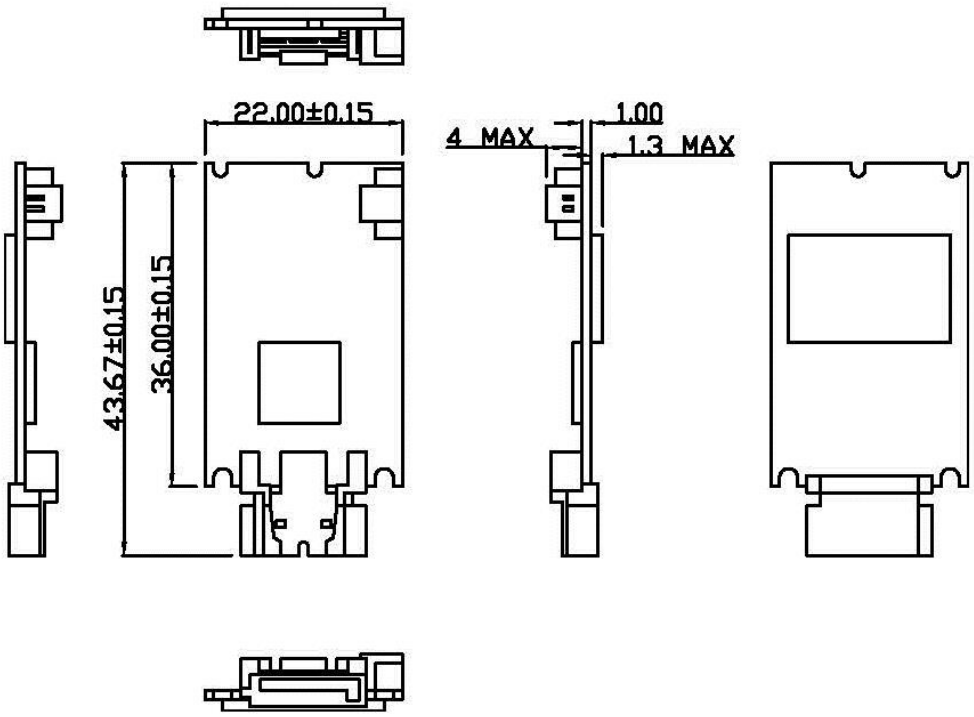

3. Supported Command

3.1 List of Command Sets

Code	Description	Code	Description
00h	NOP	97h	IDLE
06h	Data Set Management	98h	CHECK POWER MODE
10h-1Fh	Recalibrate	99h	SLEEP
20h	Read Sectors	B0h	SMART
21h	Read Sectors without Retry	B1h	DEVICE CONFIGURATION
24h	Read Sectors EXT	C4h	Read Multiple
25h	Read DMA EXT	C5h	Write Multiple
27h	Read Native Max Address EXT	C6h	Set Multiple Mode
29h	Read Multiple EXT	C8h	Read DMA
2Fh	Read Log EXT	C9h	Read DMA without Retry
30h	Write Sectors	CAh	Write DMA
31h	Write Sectors without Retry	CBh	Write DMA without Retry
34h	Write Sectors EXT	CEh	Write Multiple FUA EXT
35h	Write DMA EXT	E0h	Standby Immediate
37h	Set Native Max Address EXT	E1h	Idle Immediate
38h	CFA WRITE SECTORS WITHOUT ERASE	E2h	Standby
39h	Write Multiple EXT	E3h	Idle
3Dh	Write DMA FUA EXT	E4h	Read Buffer
3Fh	Write Long EXT	E5h	Check Power Mode
40h	Read Verify Sectors	E6h	Sleep
41h	Read Verify Sectors without Retry	E7h	Flush Cache
42h	Read Verify Sectors EXT	E8h	Write Buffer
45h	WRITE UNCORRECTABLE EXT	EAh	Flush Cache EXT
60h	Read FPDMA Queued	ECh	Identify Device
61h	Write FPDMA Queued	EFh	Set Features
70h-7Fh	Seek	F1h	Security Set Password
90h	Execute Device Diagnostic	F2h	Security Unlock
91h	Initialize Device Parameters	F3h	Security Erase Prepare
92h	Download Microcode	F4h	Security Erase Unit
93h	DOWNLOAD MICROCODE DMA	F5h	Security Freeze Lock
94h	STANDBY IMMEDIATE	F6h	Security Disable Password
95h	IDLE IMMEDIATE	F8h	Read Native Max Address
96h	STANDBY	F9h	Set Max Address

Spectra GmbH & Co. KG
vertrieb@spectra.de
Niederlassung Österreich
info@spectra-austria.at
Spectra (Schweiz) AG
info@spectra.ch
spectra

4. Part No. Decoder

4.1 Part No. Decoder

1	-	2	3	4	5	6	7	8	9
Product Line	-	Form Factor	Product Series	Cervoz Family Code (Bus / Internal Control)	Flash Brand	Flash Capacity	Flash Mode	Module Capacity	Operating Temp.
XXX	-	XX	X	XXX	X	X	X	XXXX	X

1. Product Line

CIS	Cervoz Industrial SSD
CIM	Cervoz Industrial Memory Card
CIE	Cervoz Industrial Embedded Module

2. Form Factor

2S	2.5” SATA
2P	2.5” PATA
CF	CompactFlash
CA	CFast
MS	mSATA
HM	Half Size mSATA
HS	Half Slim
M4	M.2 2242
M6	M.2 2260
M8	M.2 2280
0V	PATA Disk 40pin Vertical
4V	PATA Disk 44pin Vertical
4L	PATA Disk 44pin Horizontal Left
7T	SATA Disk 7pin Vertical Tall
7L	SATA Disk 7pin Horizontal Left
7R	SATA Disk 7pin Horizontal Right

3. Product Series

S	Supreme Series (SLC)
R	Reliance Series (RO-MLC)
M	Momentum Series (MLC)
T	Titan Series (TLC)

4. Cervoz Family Code

Bus and Internal Control for Cervoz Product Families

5. Flash Brand

M	Micron
T	KIOXIA (Toshiba)

5. Flash Capacity

A	256Mb

Spectra GmbH & Co. KG
vertrieb@spectra.de
Niederlassung Österreich
info@spectra-austria.at
Spectra (Schweiz) AG
info@spectra.ch
spectra

B	512Mb
C	1Gb
D	2Gb
E	4Gb
F	8Gb
G	16Gb
H	32Gb
I	64Gb
J	128Gb
K	256Gb
L	512Gb
M	1Tb
N	2Tb
F	4Tb

8. **Flash Mode**

Internal Control for Flash Mode

8. Module Capacity

128M	128MB
256M	256MB
512M	512MB
001G	1GB
002G	2GB
004G	4GB
008G	8GB
016G	16GB
032G	32GB
064G	64GB
128G	128GB
256G	256GB
512G	512GB
001T	1TB
002T	2TB

9. Operating Temperature

S	Standard Grade (0~ +70°C)
W	Wide Temperature Grade (-40 ~ +85°C)

Spectra GmbH & Co. KG
vertrieb@spectra.de

Niederlassung Österreich
info@spectra-austria.at

Spectra (Schweiz) AG
info@spectra.ch

spectra